Thiriet Flush Door Locking Mechanisms

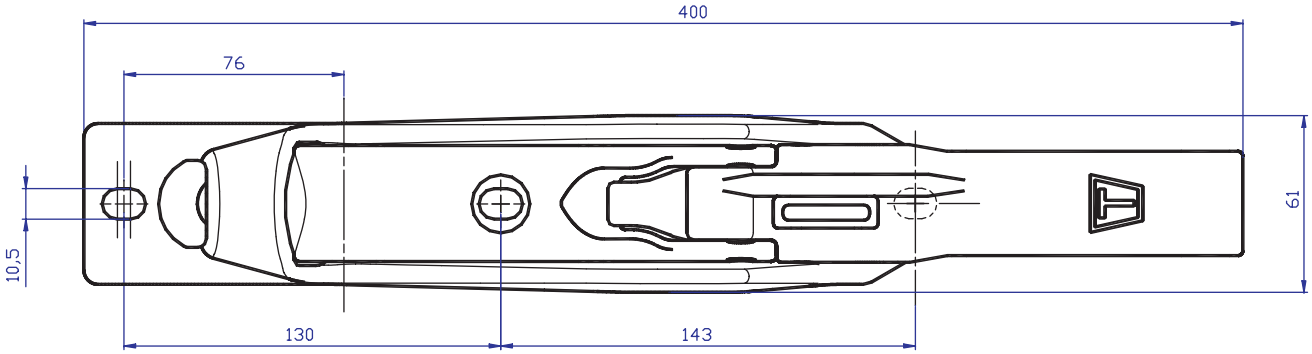

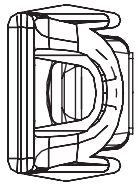

Thiriet Handle/Retainer and Top Cam/Keeper Assemblies.

Dacromet or Zinc/Nickel plated anti corrosion finish.

Available as an option on *Smoothliner* Flush Doors

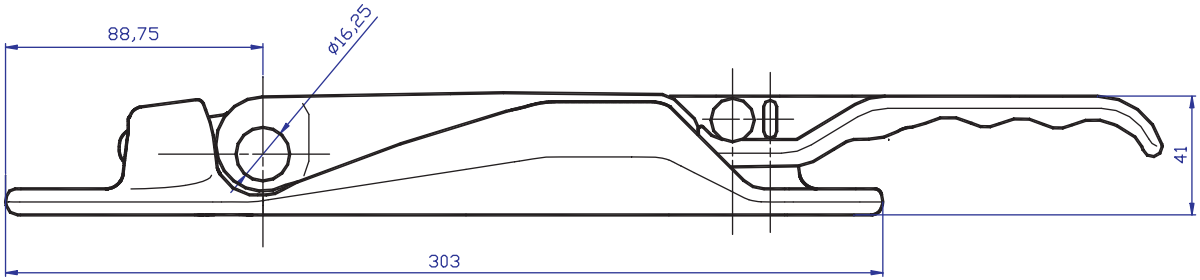

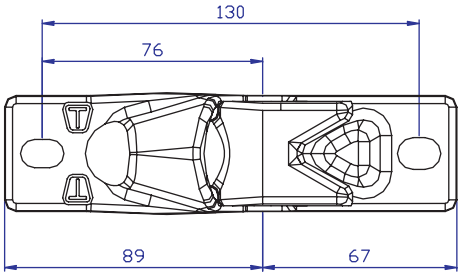

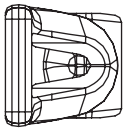

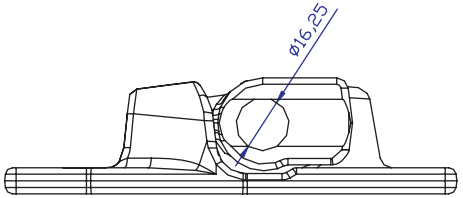

NORMANTON